NO. III / 1998

ISSN 1301-2746

ADALYA

SUNA-İNAN KIRAÇ AKDENİZ MEDENİYETLERİ ARAŞTIRMA ENSTİTÜSÜ
SUNA & İNAN KIRAÇ RESEARCH INSTITUTE ON MEDITERRANEAN CIVILIZATIONS

ADALYA

SUNA-İNAN KIRAÇ AKDENİZ MEDENİYETLERİ ARAŞTIRMA ENSTİTÜSÜ YILLIĞI
ANNUAL OF THE SUNA & İNAN KIRAÇ RESEARCH INSTITUTE ON MEDITERRANEAN CIVILIZATIONS

Çeviriler / Translations
Doğan TÜRKER
T.M.P. DUGGAN

Yapım / Production
Zero Ltd. Şti.

Yazışma Adresi / Mailing Address
Kaleiçi Barbaros Mah. Kocatepe Sk. No.25
07100 ANTALYA-TÜRKİYE
AKMED@akmed.org.tr

ISSN 1301-2746

Vehbi Koç Vakfı

İçindekiler

The Aspendos Aqueduct and the Roman-Seljuk Bridge Across the Eurymedon

Paul KESSENER-Susanna PIRAS*

Introduction

The ruins of Aspendos are among the impressive archaeological sights of Pamphylia. A visit to the well preserved Roman theatre, built against the slope at the east-side of the acropolis and kept from destruction due to its use as a palace during the Seljuk period[1], is an obligatory part of the many tours that arrange visits to Turkey's southern coast. Aspendos is situated about 12 km north of the southern coastline of Turkey, some 50 km east of Antalya. The first extensive description of Aspendos was published in 1890 by Count Lanckoronski[2]. The acropolis lies about 60 m above sea level near the light green waters of the Köprüçay or Köprüpazarıçay, the ancient Eurymedon river, which was navigable up to the city in classical times and made Aspendos an important port. Aspendos

---

* Drs. H.P.M. Kessener. c/o L&L, van Slichtenhorststraat 13, 6524 JH Nijmegen - the Netherlands, lenl@euronet.nl. Drs. S.A.G. Piras, Groesbeekseweg 118. 6524 DL Nijmegen - the Netherlands.

The Aspendos Aqueduct Research Program (AARP) was initiated by Drs. H.P.M. Kessener in association with the University of Nijmegen, the Netherlands. The AARP is supported financially by the Netherlands Organization for Scientific Research (NWO), for which the writer wishes to express his grateful thanks. The first field campaign was conducted in April 1996, during which a survey of the siphon of the Aspendos Aqueduct was carried out, results of which published earlier in this periodical (H.P.M. Kessener-S.A.G. Piras, "The pressure line of the Aspendos Aqueduct", Adalya II, 1997, 159-187). During the second campaign in April, 1998, elements of the supply aqueduct including its two supplying sources were identified, and a survey of the Seljuk bridge was carried out. Acknowledgement is due to the Anıtlar ve Müzeler Genel Müdürlüğü of the Ministery of Culture at Ankara for the granting of permission for the surveys, and towards the Government representative S. Türkmen of the Alanya Museum, Alanya for her help and much appreciated assistance. Furthermore we wish to thank Mr. K. Dörtlük, director of the Institute for Research of Mediterranean Civilizations at Antalya, and T. Lagro, director of the Netherlands Historical and Archaeological Institute at Istanbul, for their friendly help and advice. We are grateful to M. Christine van Binnebeke, from Maastricht, the Netherlands, for her appreciated assistance during the 1998 campaign, and to H. Sert, Antalya, architect of the XIII. Bölge Müdürlüğü and responsible for the Seljuk bridge restoration works, as well as to G. Büyükyıldırım (Antalya), K. Güneş (Serik), and M. Demir (Deniztepesi), for friendly advice and sharing of knowledge, and to M. Durur, director of DSI (Serik) for hospitable lodgement facilities.

The survey of the Selçuk traffic bridge and its Roman counterpart was carried out during the 1998 campaign by S. Harmeling and M. Stitz of the Technische Universität of Essen/Mesenburg in co-operation with K. Grewe of Bonn/Germany. The survey was financially supported by the Förderkreis Vermessungstechnisches Museum e.V. Dortmund/Germany, while the surveying apparatus was provided by Z. Jena, Germany. See also K. Grewe-H.P.M. Kessener-S.A.G. Piras, "Im Zickzack-Kurs über den Fluß, die römisch/seldschukische Eurymedon-Brücke von Aspendos (Türkei)", AW 30, 1999, 1-12.

1 E. Akurgal, Ancient Civilizations and Ruins of Turkey[7] (1970) 334-335; J. Wagner, Turkey, die Südküste von Kaunos bis Issos (1986) 178.

2 K.G. Lanckoronski, Städte Pamphyliens und Pisidiens I (1890) 85-124.

occupies an oval, flat-topped hill with steep slopes on all sides rising about 30 m above the surrounding plain[3]. As seen from a distance, the skyline of Aspendos is dominated by the remains of the Nymphaeum (2nd-3rd century A.D.) and by the monumental entrance hall of the Basilica, both rising to a height of 15 m. (Fig. 1).

The city was founded as a colony of the Argides who called it Estvediis; it was already known as Aspendos by Thucydides and Xenophon. Aspendos entered upon the stage of world events when in 465 B.C. Cimon defeated the Persians in a battle at the Eurymedon. Alexander the Great, on his march from Side to Sillyon, took the city without a fight in 333 B.C., the people of Aspendos paying a tribute and submitting hostages in exchange for leaving their city undamaged. In 133 B.C. it came under Roman rule. Its period of greatest prosperity occurred during the 2nd and 3rd century A.D., when extensive building projects were realized, the remains of which can be seen today.

Aspendos, by its location, commanded the land-traffic that used the coastal road between Antalya and the eastern regions. On the Tabula Peutingeriana the road from Perge and Sillyon to the east crosses the Eurymedon near Aspendos (Fig. 2)[4]. Ships must have been able to pass this crossing in order to reach the city. Across the river, a road branched off to the north on the east side of the Eurymedon valley towards Selge and the Pisidian regions, for which the Romans constructed an impressive bridge near Beşkonak 25 km north of Aspendos[5].

The Seljuk Sultan Gıyaseddin Keyhüsrev I from Konya conquered Pamphylia in 1207. During Seljuk rule the present bridge over the Eurymedon 2 km south of Aspendos was constructed. Until a few years ago this bridge was used by local traffic and it is frequented by tourists today. The 5 m wide bridge crosses the river by means of 5 arches, with an additional two arches on the left bank for flooding conditions, but not in a rectilinear course but with a remarkable parallel shift in the middle of the river giving it a zigzag plan (Fig. 3). This feature is commonly explained to the visitor as a deliberate device introduced by the builders of the bridge to provide a better defence. On closer inspection, the true reason for this remarkable design quickly becomes clear. The foundations of several piers and of the ramp on the left side of the river are of Roman origin. Moreover, a ramp-like Roman construction on the right river bank equipped with one partly intact arch and standing isolated today, also indicates the existence of an earlier crossing, of larger dimensions (Fig. 4). Clearly the ruins of the Roman bridge have been used by the Seljuks as the foundation for their new construction. The Roman bridge had been about twice as wide as the present one and the Seljuk builders were able to include its stable remains within their design. However, of the foundations of the Roman piers, only the upstream half had remained in a satisfactory condition, while annoyingly just the downstream half of the

---

3 J.B. Ward-Perkins "The Aqueduct of Aspendos", BSR 23, 1955, 115-123.

4 P. Stuart, De Tabula Peutingeriana, Museumstukken II, 1991.

5 This bridge spans a canyon in a single arch 40 m above the waters of the Eurymedon and is as sound today as when it was built. The bridge was used until recent years by heavy truck traffic, on behalf of which the large stone blocks of the parapet were thrown over the side. These stones can be seen in situ in the photograph by G.E. Bean [G.E. Bean, Turkey's Southern Shore (1979) Fig. 65]. The bridge now has been closed to traffic. It was recently restored, and acquired a new parapet.

adjoining pier had been preserved. By making use of these Roman remains the Seljuk architects were able to design the present bridge, its zigzag plan representing the reuse of this Roman material. They knowingly accepted this unusual course for their bridge because of these constructional reasons, leaving us with a picturesque example of their practicality to be admired today.

The construction material of the Seljuk bridge consists mainly of limestone blocks for outer cover and for the construction of the arches, in combination with a rubble core. The remains of the Roman bridge, upon which the Seljuks constructed the piers of their bridge, show in their larger part, blocks of local conglomerate stone and mortared rubble. This is the same material that was used for the construction of the theater as well as for the large entrance hall of the basilica and also for the nymphaeum on the acropolis. As a matter of fact, the acropolis itself, a 60-acre rocky outcrop rising about 30 m above the surrounding plain, consists of the same material. The material was at hand nearby, and one can note the quarries to the north of the acropolis. At that side of the acropolis, a 510 m long, 5 m wide and 15 m high aqueduct crossed the, in Roman times, swampy valley towards the mountains in the north. This aqueduct is also made of conglomerate stone blocks with a mortared rubble core. This aqueduct was part of the remarkable pressurized water system that served the city and for which Aspendos is also famous. It will be shortly discussed below.

In order to investigate the Seljuk bridge and its Roman counterpart, and their interrelation, a survey was carried out during the second campaign of the Aspendos Aqueduct Research Program (AARP) by S. Harmeling and M. Stitz of the University of Essen, Germany[6].

The Aspendos Aqueduct

Water from two sources, located in the mountains to the north, at about 500 m above sea level and 17 km away from Aspendos, was carried to the southern border of these mountains by means of a conventional aqueduct channel[7]. The mapping of the aqueduct was completed during the 1998 campaign (Fig. 5). The aqueduct is thought to have been constructed in the 2nd or 3rd century AD.[8]. It incorporated several bridges and tunnels,

---

6 The technical apsects of the survey are described in the unpublished thesis of Harmeling and Stitz in relation to their education as surveying engineers. See S. Harmeling-M. Stitz, Aufnahme, kartographische Bearbeitung und Rekonstruktion der römisch/seldschukischen Straßenbrücke von Aspendos (Türkei) (unpublished thesis, University of Essen/Germany 1998). See also K. Grewe-H.P.M. Kessener-S.A.G. Piras, "Im Zickzack-Kurs über den Fluß, die römisch/seldschukische Eurymedon-Brücke von Aspendos (Türkei)", AW 30, 1999, 1-12; S. Harmeling-M. Stitz-P. Mesenburg, Die Brücke von Aspendos. Der Vermessungsingenieur (1999) 110-115.

7 The two sources were identified by P. Kessener and S. Piras during the 1996 and 1998 field campaigns of AARP. The spring complex at Gökçepınar village ("heavenly spring" village) situated in a valley 550 m above sea level and surrounded by rugged mountains rising to over 900 m, is furthest away from Aspendos, 15 km to the north-east as the bird flies, 19 km along the course of aqueduct and siphon. The Pınarbaşı spring (Turkish for "natural fountainhead" or "springhead") near Gökçeler village, contributing to the Koba Dere which discharges into the Eurymedon about 12 km to the east, is located 440 m above sealevel at the foot of a large limestone outcrop of 754 m called Aktop Tepe. Together they delivered water at a rate of 70-80 l/sec in April 1998.

8 Ward-Perkins, op.cit. (supra n.3) 122-123. Ward-Perkins estimates a date in the middle or second half of the third century as most probable, while he mentions the middle of the second century and the end of the third as extreme limits. This agrees with the construction characteristics of the brick parts of the hydraulic towers. See H.P.M. Kessener-S.A.G. Piras, "The pressure line of the Aspendos Aqueduct" Adalya II, 1997, n. 18; H. Dodge, Brick Construction in Asia Minor in: S. Macready-H. Thompson (ed.), Roman Architecture in the Greek World (1987) 107.

having a channel of modest dimensions, 55-60 cm wide and 90 cm high on the inside[9]. The water crossed the 1.7 km wide valley, between the mountains to the north and the acropolis, by means of an inverted siphon (Fig. 6). The pipeline of this siphon was made from perforated stone blocks, and ran up and down over two 'hydraulic towers' presently about 30 m high and over the 510 m long bridge between these towers, before arriving at the northern edge of the city. It is assumed that the top of each tower was equipped with an open tank into which the water poured from the pipeline and from which the water entered the next section, dividing the pipeline into three consecutive siphons. The purpose of the hydraulic towers and the breaking up of the siphon into three is as yet not clearly known, although a relationship between these three consecutive siphons and the prevention of destructive water pressure conditions endangering the pipeline at the bends is plausible. During the 1996 campaign the siphon could be traced from header tank to receiving tank, from which it could be deduced that the towers were originally up to 40 m high. The towers are among the highest of Roman constructions, presumably at the top of the list stands the Pont du Gard measuring 48.77 m. The elements of the Aspendos siphon were extensively described in an earlier issue of this periodical[10].

The pipe elements of the siphon measure 86 x 86 x 50 cm to 90 x 90 x 70 cm and have a perforation of 28 to 30 cm (Fig. 7). The stones were made of limestone cut at the foot of the Zincirli mountains, a small range of mountains which climbs to a height of 300 m above the acropolis and lies to the east, just across the Eurymedon. Because of the excellent view from this range, over the Aspendos acropolis and its surroundings, including the bridge over the Eurymedon, its most prominent peak, with a vertical east face of over 100 m, had served as fortified look out post. This is shown by the remains to be seen on this peak of fortification walls and of several buildings and cisterns (Fig. 8). At the foot of the mountain range, just outside Çakıs village not far from the east bank of the Eurymedon, a small limestone outcrop called "the hill with the windows" presumably served as a quarry for the pipe elements, the resulting cutout chambers were later reused as tombs for burial. These chambers were apparently destroyed early in 1998 for the production of cement or for some similar reason, a corner or two of some of the chambers is, regrettably, all that is left to be seen of this structure.

The pipe elements were joined together by means of a socket and flange system and sealed off by a mixture of lime and olive oil[11]. This material expands and hardens when in contact with water to withstand considerable water pressure, which in the Aspendos pipe line attained a pressure of up to 4 bar (40 m of water column). Of these stone pipe blocks one may still find a few lying about the course of the siphon, but originally the 1670 m long pipeline contained over 3000 of these elements. Once the water had arrived at the edge of the acropolis, it was carried by means of an open channel towards the richly decorated Nymphaeum, which stands today 15 m high and 35 m long and is to be found on the north side of the agora. The city was proud to have an aqueduct and it was not

9 The results of the 1998 campaign were presented at the "XXI. Kazı, Araştırma ve Arkeometri Sonuçları Sempozyumu", Ankara 1999.

10 Kessener-Piras, op. cit. (supra n.8) 159-187.

11 R. Malinowski, Concrete and Mortars in Ancient Aqueducts, Concrete International, 1/79, 74.

afraid to show it, although in the centuries before it was built, the city functioned very well without it, and had, in the process gained the wealth to build it. From the nymphaeum, where the citizens drew water from the basins along its front, the water was presumably led to the huge cistern underneath the 100 m long basilica on the east side of the agora, and also to both bath complexes, which are down on the plain to the south of the acropolis.

Spolia

Turning our attention towards the Seljuk road bridge over the Eurymedon, we discovered that several perforated stone blocks, reused pipe elements of the Aspendos siphon, have been incorporated into the walls of the bridge. It is often pointed out that the Seljuks used the remnants of the Aspendos siphon as *spolia* for the construction of their bridge (Fig. 9,10). In some of the perforations calcareous incrustations (sinter) indicate that water did flow through the pipe elements for a prolonged period of time. Underneath the smaller arches, on the eastside of the Seljuk bridge, at low water level, numerous pipe elements were seen lying in the riverbed. During the 1998 restoration works this part of the riverbed has been covered with a layer of concrete and these stones have now disappeared from view.

Surprisingly, on further inspection one may discover that a much larger number of these stone pipe elements are incorporated in the *Roman* moles on either side of the river (Fig. 11)[12]. Furthermore, the largely intact Roman breakwater on the right side of the river, and the ruins upon which the piers of the sixth arch of the Seljuk bridge was constructed (counting from the right bank of the river) show that these pipe elements were used as construction material for the Roman bridge. During the 1996 campaign over 250 of these elements were counted incorporated in these Roman remains, while only 15 were seen incorporated in the fabric of the Seljuk bridge.

As the inside of the perforations of several stone blocks is covered by calcareous incrustations, these pipe elements were apparently reused for the construction of the Roman bridge after prolonged operation of the aqueduct. Thus the Roman bridge must have been built after the aqueduct and the siphon had gone out of use for some reason. This posed the question of the period of operation of the aqueduct. From the thickness of calcareous deposits (sinter) in the aqueduct channel found some 10 km north of Aspendos, it could be estimated that the water had run along the channel for at least about 130-150 years.

Possibly the Aspendos siphon had been destroyed by some disastrous earthquake, as for instance occurred in Cyprus 250 km south east in 363 A.D. Such an earthquake could well have destroyed the aqueduct including the siphon and its elevated towers, while also ravaging the road bridge over the Eurymedon. The bridge was of essential importance for the east-west trade route along the coast as it was the only place to cross the fast flowing

---

12 The presence of stone pipe elements originating from the Aspendos siphon was first noted in the ruins of the Roman bridge in 1994 by Dr. Klaus Grewe, from Bonn/Germany. See Grewe-Kessener-Piras, op. cit. (supra n.6) n. 3.

river. As the Aspendians of course did not want to loose their position dominating the traffic, their first interest was to rebuild the bridge. We do not know what the earlier bridge looked like, or even if there was a stone bridge at all before the disaster, but we do know that the river was navigable up to the city which served as an important base for the Roman trading fleet. Construction of a new bridge as fast as possible was required. What material could be used for the rapid construction of this bridge? What was more convenient that the stone pipe elements from the destroyed aqueduct system, which were lying around in thousands, nearby and already neatly cut? If we assume the construction date of the aqueduct to be in the first half of the 2nd century A.D., after which the aqueduct functioned for about 1 1/2 centuries, it seems probable that the Roman bridge was built sometime early in the 4th century A.D. Later this bridge was destroyed in its turn. Its ruins then serving as the foundation for the construction of the Seljuk bridge about 900 years later.

During the investigation of the Seljuk bridge in the early 1990's on behalf of the planned restoration work, divers inspected the Roman foundations upon which the Seljuk piers were built. They discovered long heavy bars of iron, furnished with a square hole at one end and a hook at the other (Fig. 12,13)[13]. Each hook fits into the hole of the next bar. The bars measure 140 cm in length and 7 x 7 cm in thickness and weigh about 55-60 kg. The divers brought three bars to the surface, one of which is almost intact except for the hook which is broken off. They are in excellent condition. The bars apparently served as fixation elements (*Spannanker*) for the stone blocks forming the foundations of the bridge piers (Fig. 14). It was said that the divers saw several of these fixation elements *in situ* in the foundations. Remains of mortar adhering to the surface suggest that the bars were placed in slots cut in the stones and covered with mortar (Fig. 15). A similar fixation method is known from the Roman bridge over the river Tyne in England[14], but the size of the fixation elements of the Roman bridge at Aspendos seems unparalleled.

The Roman Bridge

Though numerous parts of the Roman road bridge can be seen in the riverbed as well as on both riverbanks, many parts are dislodged from their original location and thus fail to contribute to its reconstruction. The remnants of the ramps on either side of the river and of the mole on the right side and part of the mole on the left side are in situ today, as is the massive 9.6 m wide breakwater on the right river bank and also the foundation of one pier in the river. The preliminary survey data of the ramps made clear that the bridge took a horizontal bend of about 15°, which could be located on the right river bank in a section where the Roman construction has been destroyed almost completely. It can be shown that a pier had been standing at the section where the bend occurred.

---

13 The restoration work carried out on this bridge, as well as many other historical bridges in Anatolia, are conducted under the responsibility of Mrs. H. Sert, architect of Karayolları XIII. Bölge Müdürlüğü, Köprüler Servisi, Antalya, who drew our attention to the existence of these elements. Their photographing and description were kindly made possible by the director of the above institute where the elements are stored today.

14 K. Grewe, "Straßen, Brücken und Meilensteine – Spuren römischer Infrastruktur in England", AW 5, 1995, 348-349 Fig. 9.

The sloping of the ramps are of particular interest, as these might provide clues about the original height of the bridge. The slopes were measured with high precision, and they turned out to be remarkably similar: 12.3 percent for the right ramp, and 12.2 percent for the left ramp. Reconstruction by extrapolation of both ramps along a straight line would result in a bridge of gigantic dimensions. Its highest point would have been over 12 m above the present bridge level allowing ships up to 20 m in height to pass. However, such a form of bridge finds no parallel in Roman times[15] and, moreover, the reconstruction could not be made to comply very well with the in situ remains in the river.

Instead of this, a reconstruction with the sloping of the ramps ending in the area of the riverbanks, and with a roadway turned to the horizontal, necessitated a total of 6 arches in the horizontal part of the bridge (Fig. 16). Three smaller arches, one on the right side 5.1 m wide and still incorporated in the extant remains, and two on the left side were added in the sloping parts for the passage of water in conditions of flooding. The river itself, in between the moles on either side, was crossed by means of three arches, the dimensions of which may be deduced from the distance between the moles and the in situ remains of the pier in the river. From this, and from arguments of symmetry, the diameter of the middle arch could be estimated to have been 23.5 m while for the adjoining arches a diameter of 15 m could be accounted for. In the river two massive breakwaters 9.6 m wide had served as support for the arches. It was noted that the moles on the upstream side were, at 8.2 m, longer than the 4.8 m on the downstream side, which seems reasonable enough in view of the direction of the fast flowing water. Such moles were common in Roman times; a technical detail designed to prevent the river undermining the piers erected on the riverbanks. On the left side of the river, the river's strong flow accomplished exactly what these reinforcements should have prevented: the mole partly sagged into the river together with the foundation of the pier and the breakwater, their original position can only to be conjectured today (Fig. 17).

The Roman bridge was about 4.1 m higher than its Seljuk counterpart. It was 9.6 m wide, and had a total length of 260 m. The extended walling in the part of the bridge above the massive piers and breakwaters in the river were presumably equipped with openings for the passage of water in flooding conditions. This can be considered as a standard provision in Roman bridge construction[16].

The Seljuk Bridges

It may have been an earthquake again, perhaps combined with an enormous flood of water, that caused the Roman bridge to collapse, when, we don't know. After the consolidation of Seljuk power in this region early in the 13th century it was decided to renew the river crossing once more. The Seljuks decided the ruins of the Roman bridge were stable enough to be used as foundations for their new bridge, which must have saved them considerable effort. Their design provided for a bridge of lower height, they were probably unaware of how the former bridge had looked like, the Roman ruins blocked the pas-

---

15 Grewe-Kessener-Piras, op. cit. (supra n.6) 8.

16 V. Galliazo, I Ponti Romani (1994) XXX.

sage of ships to a city which no longer served as a port of any significance. As in time the river had shifted its bed towards the left side, the Seljuks could safely construct a new ramp on the right bank closer to the river just in front of the Roman breakwater. The left ramp of the Roman bridge could be used as it was. In the river the Roman piers and breakwaters had partly broken up and had fallen apart while large portions of the bridge itself had fallen into the river adding to the material the Seljuks could reuse. They had to build their way across the river in some sort of a hop, skip and jump, building their bridge half as wide as its Roman counterpart with a parallel shift in the middle of the river (Fig. 18). Of course they made use of the materials of the Roman bridge lying about on the riverbanks, thus applying pipe elements of the Aspendos aqueduct once more.

Stone slabs were used for the parapet, of which at least one, many having been toppled over the side in time, turned out to bear an inscription in Greek. The inscription, on the upstream side near the right riverbank, was inserted up side down and must be considered as spolia[17]. On the downstream side, above the first pier in the river near the right bank, a Seljuk inscription of excellent quality has been preserved. It consists of three stone slabs alongside each other (Fig. 19). A fourth slab was found lying in the riverbed on the upstream side (Fig. 20). The bridge has been extensively restored between 1997-1998[18], gaining a completely new roadway and a parapet for all its length, the slabs which had been dislodged from their positions were again to be included in the new parapet (Fig. 21,22,23). Originally there were at least five inscription slabs as photographs of the intact parapet made in the seventies show, which regrettably lack sufficient quality to permit decipherment[19]. According to S. Fikri Erten, founder of the Antalya Museum, the original inscription was composed of 6 separate stone slabs, of these stones slabs, the one carrying the date of construction and the name of the Sultan who commissioned this building were not found[20]. The present parts however mention the names of Sultan Keyhüsrev (1192-1196 and 1205-1211), and of Sultan Kılıç Aslan (1155-1192) who was Keyhüsrev´s father, suggesting that Sultan Alaeddin Keykubat (1220-1232), the son of Keyhüsrev, may be considered as the builder of the present bridge, probably shortly after he conquered Alanya in 1221.

---

17 The inscription is weathered to such an extent that it is recognisable only in special lighting conditions. From photographs of the in situ stone slab S. Piras (University of Nijmegen) transcribed decipherable sections of the formerly unknown inscription, which contains the expression episfragistai (to seal) and several names as Phereas and Marcus. After the stone was dislodged because of the restoration works, the inscription could be copied. It is presently undergoing researched by S. Şahin of Akdeniz University at Antalya. Apparently the inscription may be in some way be related to the Roman bridge. Publication is expected next year in EpigrAnat.

18 See note 14 above.

19 G. Tunç, Taş Köprülerimiz (1978) 30; F. İlter, Osmanlılara Kadar Anadolu Türk Köprüleri (1978) 121-124 Fig. 62.

20 S.F. Erten, Antalya Livası Tarihi (1997) 152.

Özet

Aspendos Su Kemeri ve Eurymedon Irmağı'ndaki Roma-Selçuk Köprüsü

1998 yılında ikincisi düzenlenen "Aspendos Su Kemeri Araştırma Programı"nda Selçuk köprüsü ve onun Roma Dönemi öncülünün izleri incelenerek, makalede araştırma sonuçları ile köprü üstündeki Selçuk yazıtıyla ilgili farklı yorumlardan elde edilen bilgiler tartışılmıştır.

Aspendos Akropol'ünün 2 km. güneyinde Eurymedon Irmağı (Köprüçay-Köprüpazarıçay) üzerinde yeralan Selçuk köprüsü yapım tekniği ile dikkat çekicidir. Bugünkü konumuyla 5 m. genişliğindeki köprü karşı sahile ulaşmadan önce ırmağın ortalarında iki kere 90°'lik dönüş yapar. Bu dönüşlerle ilgili olarak en çok kabul gören açıklama kıvrımlı bir köprünün savunmasının, düz planlı bir köprüden daha kolay olduğudur. Ancak yazara göre teknik açıdan yaklaşıldığında bu teorinin bir anlamı yoktur.

Nehrin sağ kıyısında Roma Dönemi kökenli olan rampa benzeri bir yapının kalıntıları vardır. Bugün, izole edilmiş gibi duran yapı, Selçuk köprüsünün öncülünün olduğunu düşündürür. Selçuk köprüsünün payandalarında ve sol yakadaki rampasında Roma Dönemi'nden devşirme malzeme bulunmaktadır. Açıkça anlaşıldığına göre, Selçuklu mimarlar tahrip olmuş eski köprünün malzemelerini tekrar kullanmışlardır. Ancak, Su Kemeri'ne ait çok sayıda taş bloğun Roma Dönemi köprüsü yapımında da devşirme olması şaşırtıcıdır. Nehrin aktığı yöne göre sağ taraftaki tamamlanmamış Selçuk yazıtı, nehir yatağında bulunan bir parçasıyla birlikte Selçuk köprüsünün yapımıyla ilgili bilgi verir.

Figure 1
The Aspendos nymphaeum seen from the west.
To the left: the entrance hall of the basilica.

Figure 2
Tabula Peutingeriana, Pamphilia
(S. Harmeling-M. Stitz).

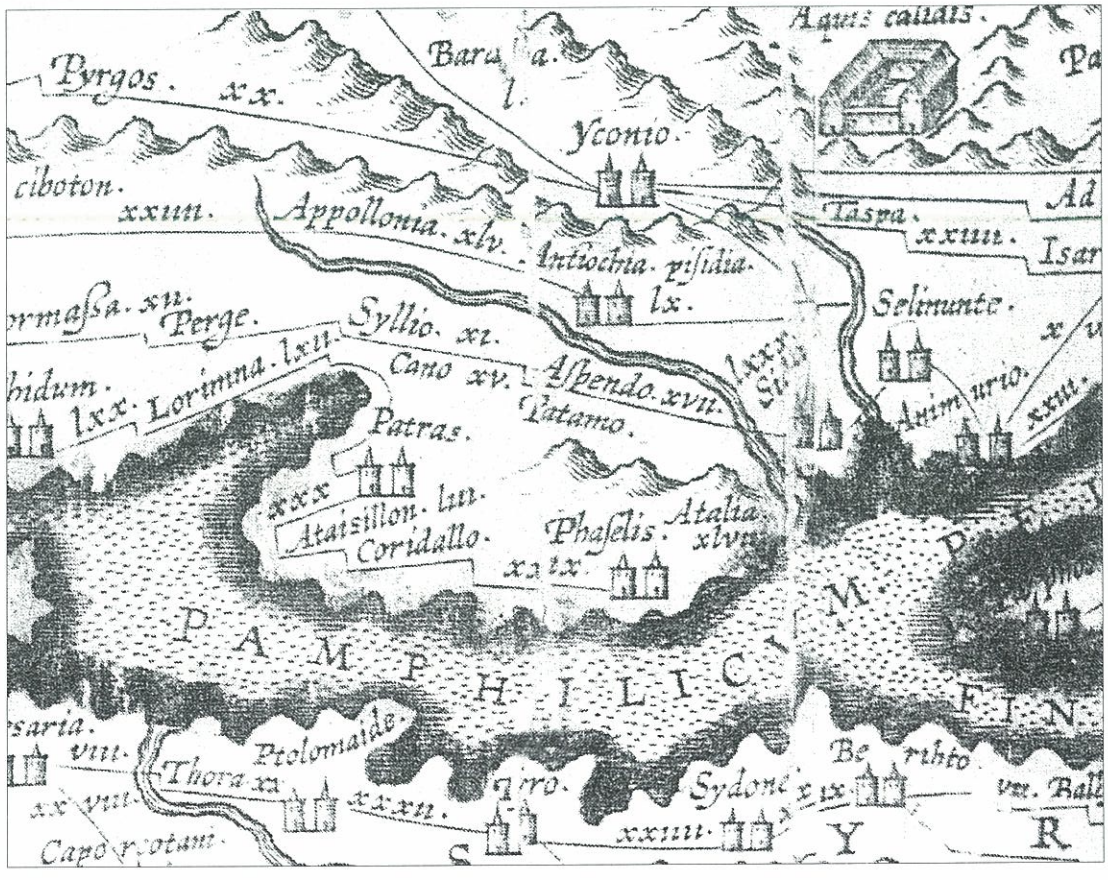

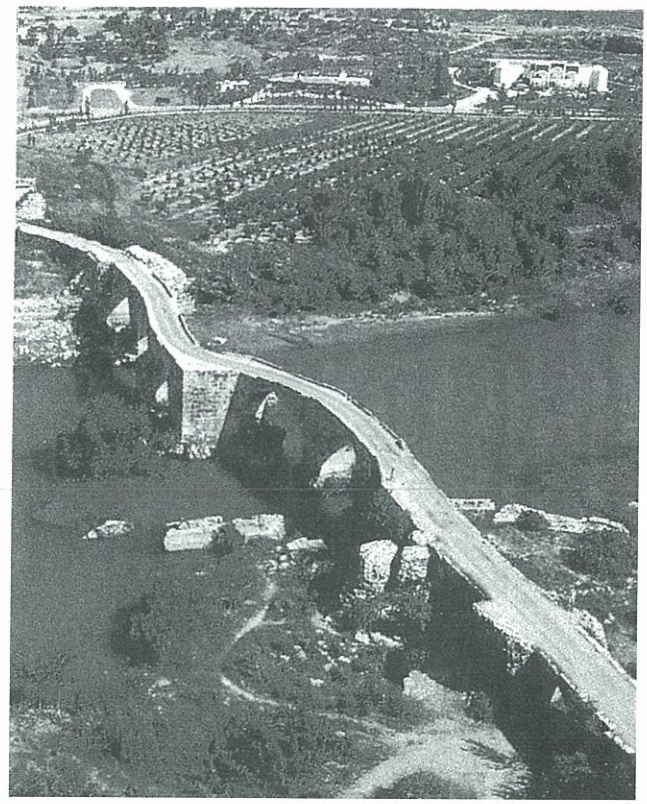

Figure 3
Seljuk bridge over the Eurymedon
(P. Kessener-S. Piras,
S. Harmeling-M. Stitz).

Figure 4 Roman bridge ramp.

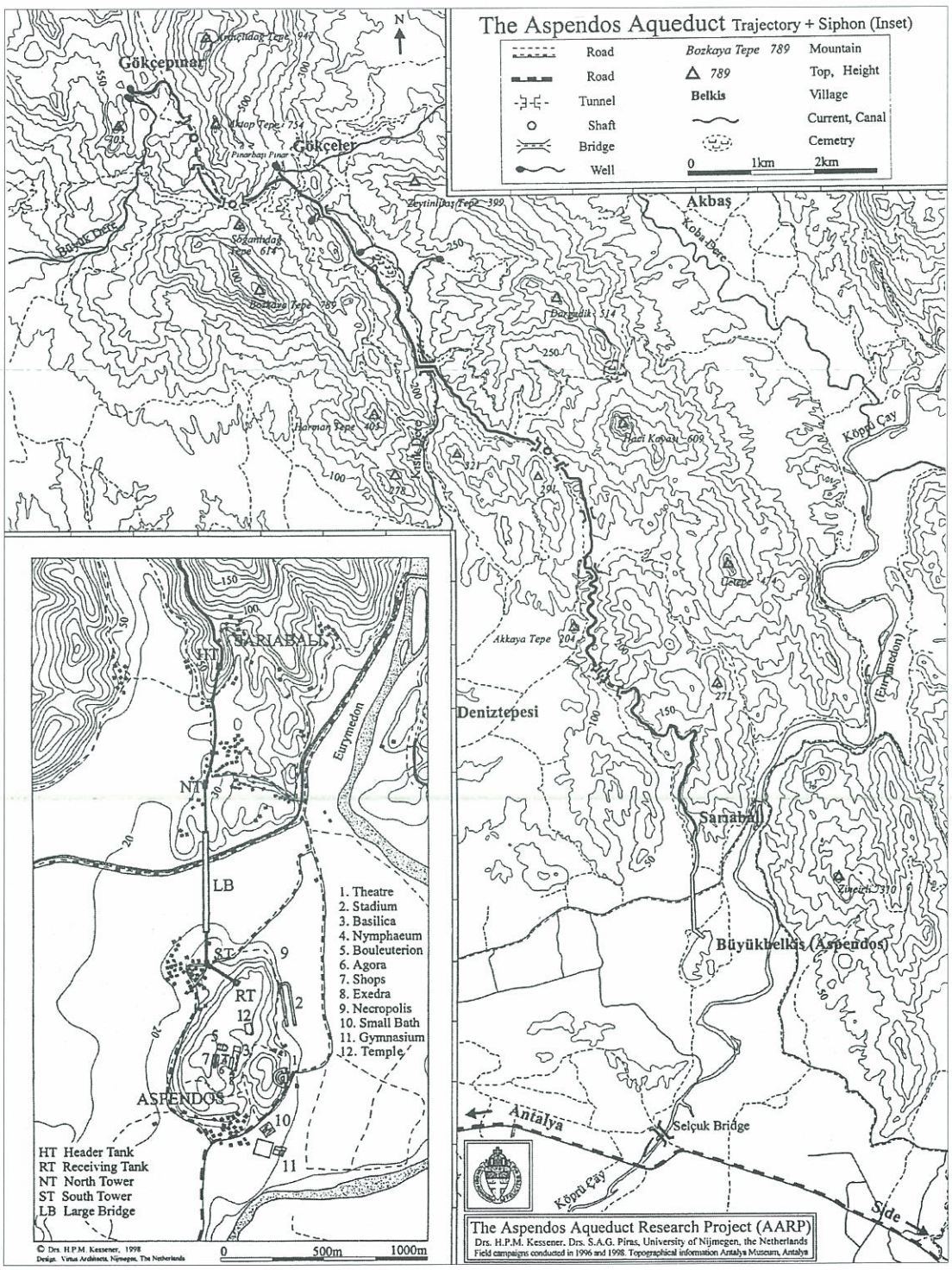

Figure 5 The Aspendos aqueduct, course and siphon (inset).

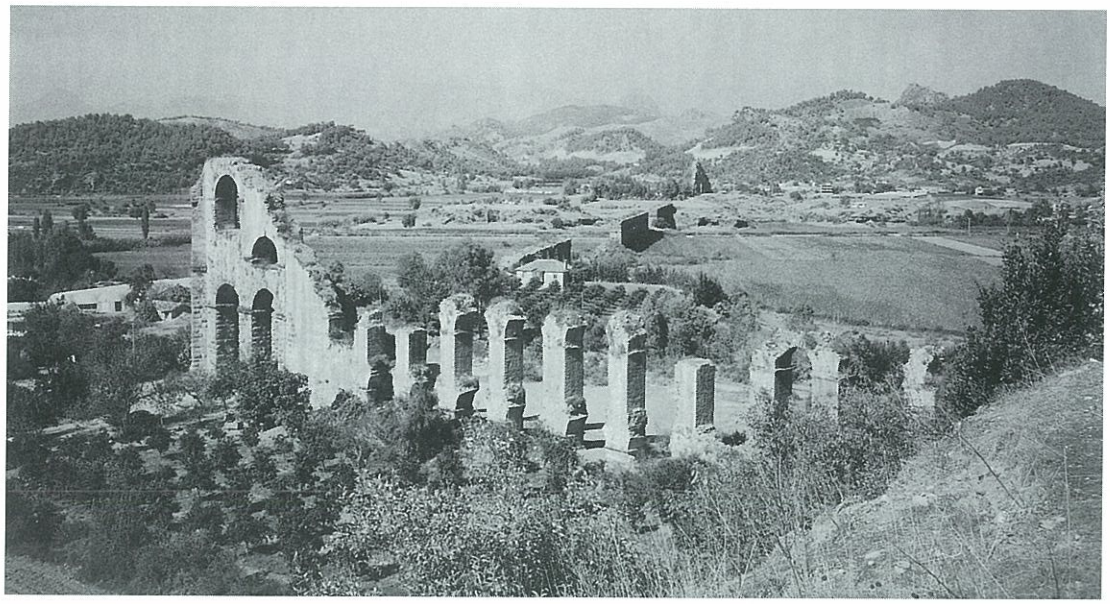

Figure 6
The Aspendos siphon, view from the acropolis (H. Franssen).

Figure 7
Stone pipe element of the Aspendos siphon (H. Franssen).

Figure 8
Zincirli, top of the mountain (K. Güneş).

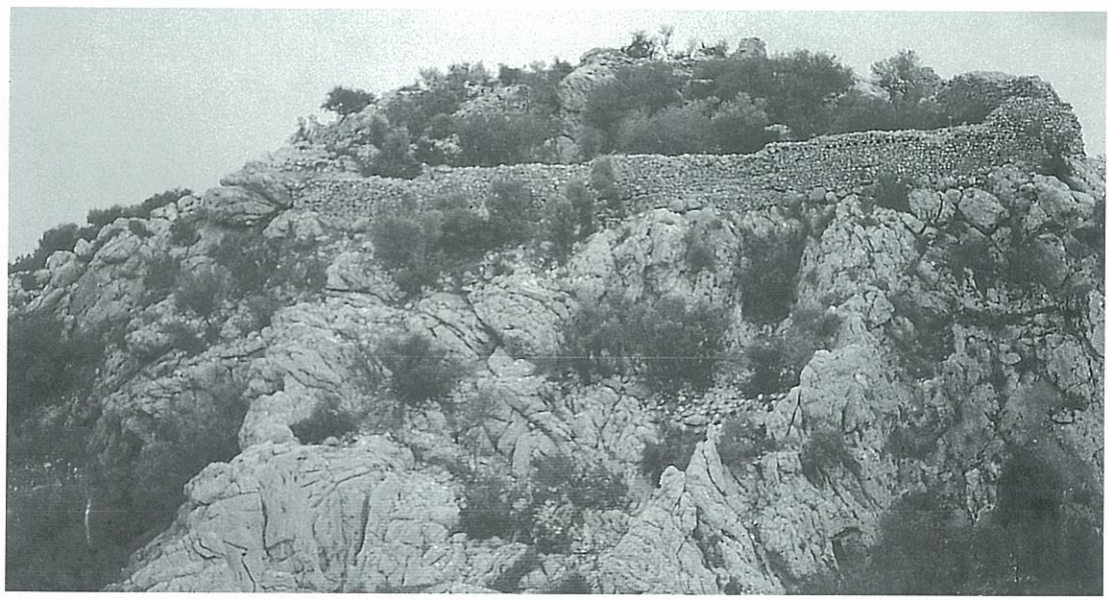

Figure 9-10 Pipe elements of the Aspendos siphon incorporated into the Seljuk bridge.

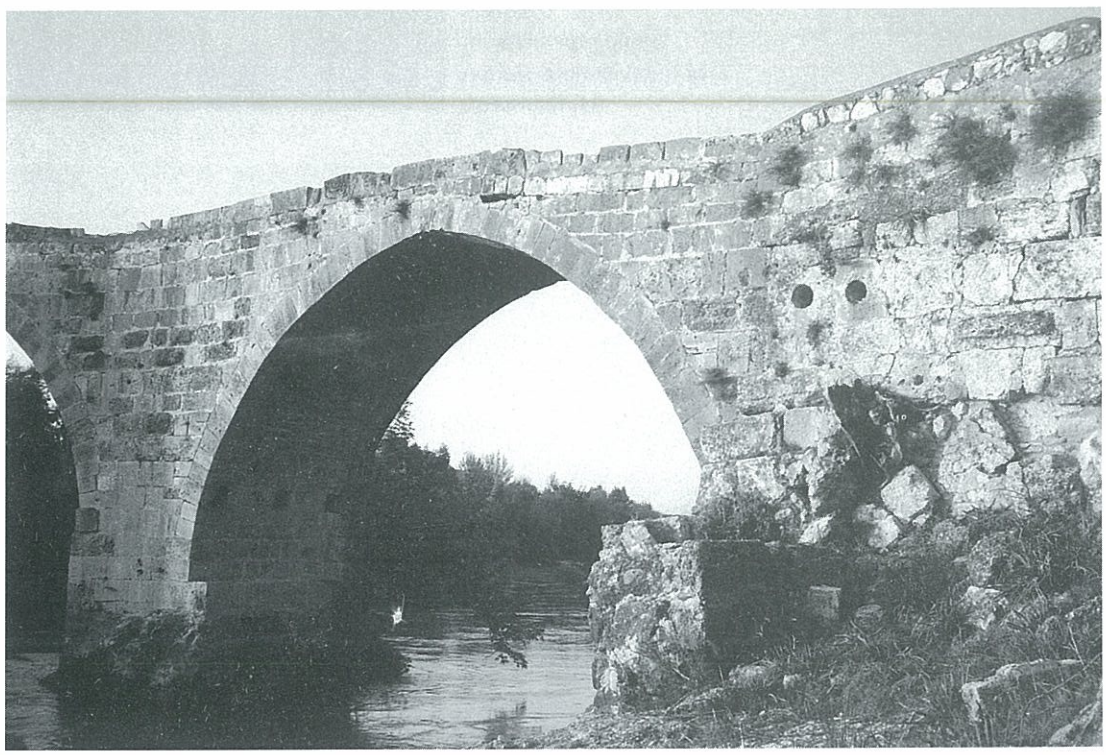

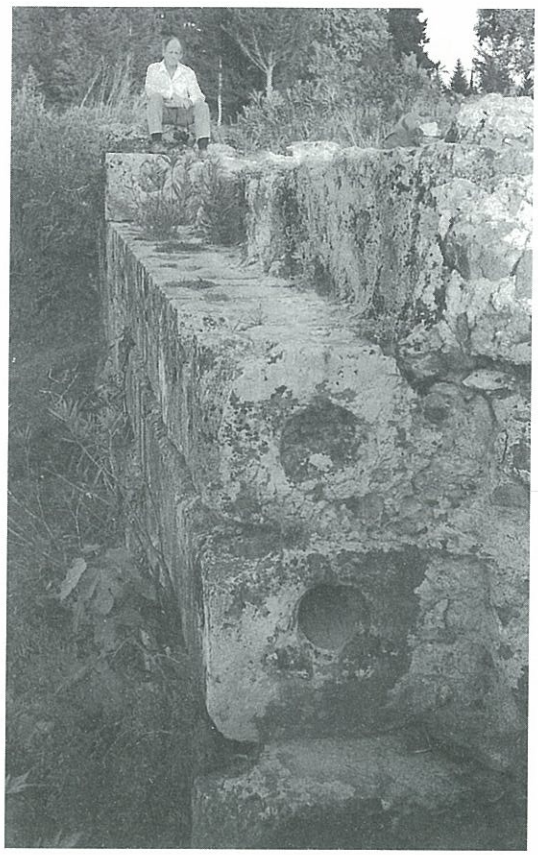

Figure 11
Pipe elements of the Aspendos siphon incorporated in the Roman mole.

Figure 12
Iron fixation elements from the foundations of the Roman bridge.

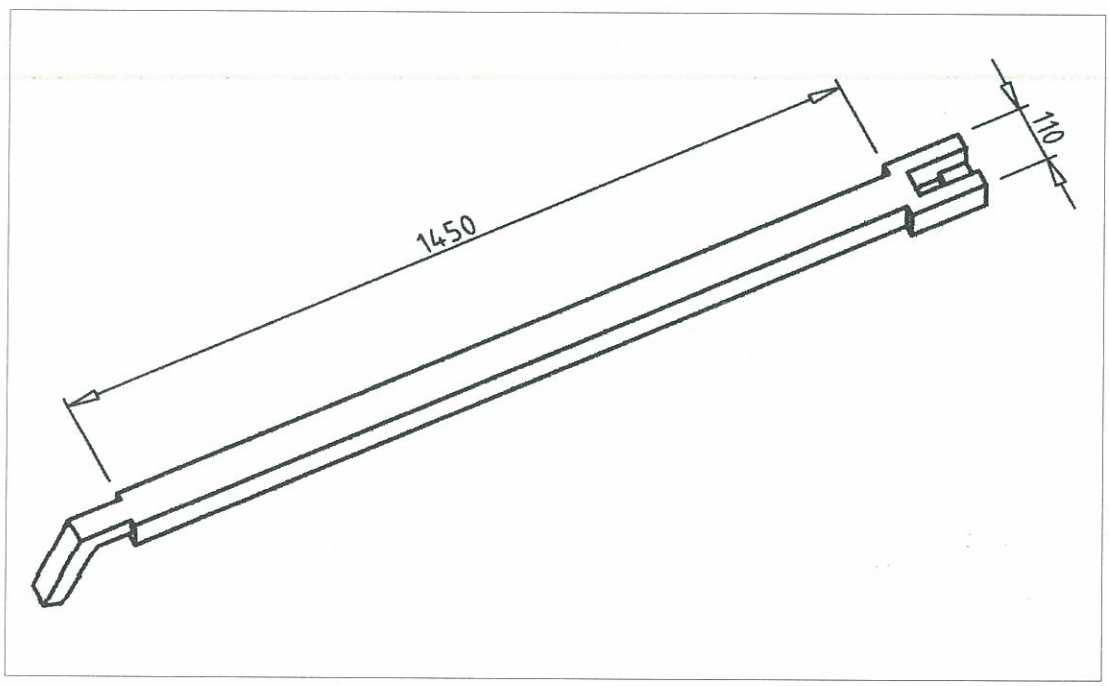

Figure 13 Dimensions of the fixation element, in mm.

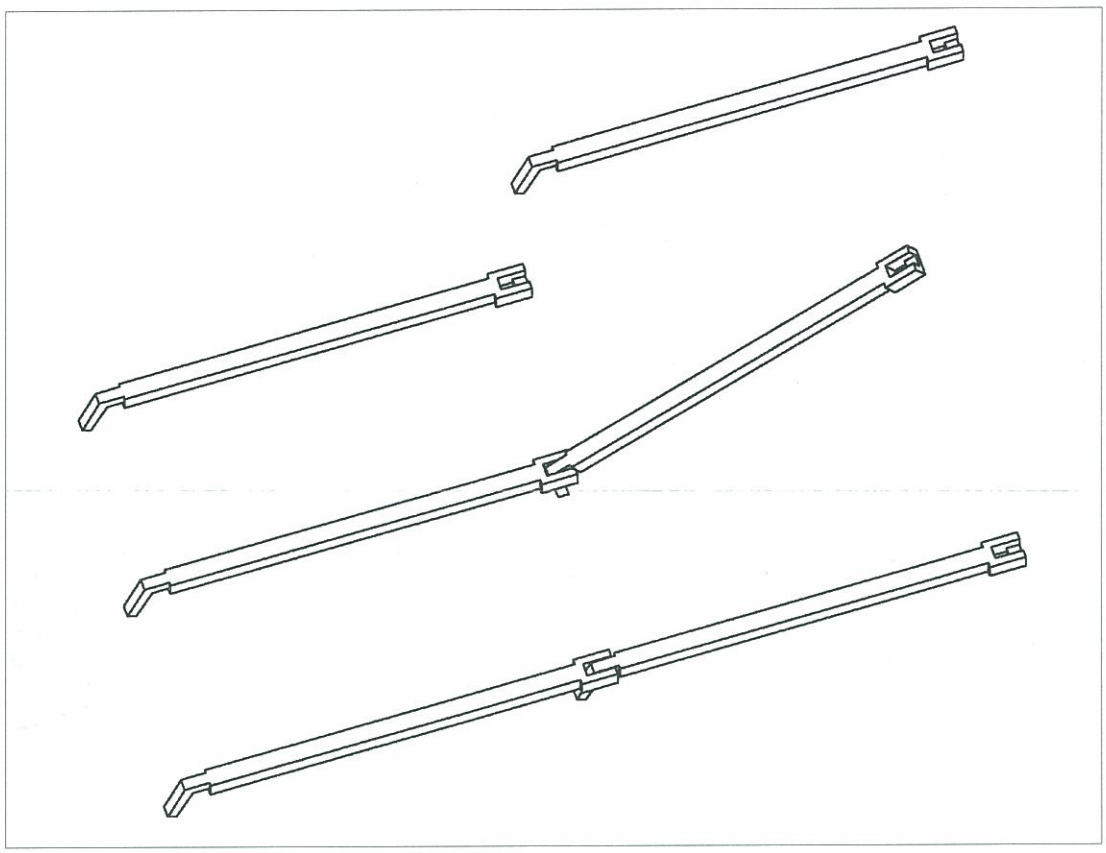

Figure 14 The slanted hook facilitated the positioning of the elements.

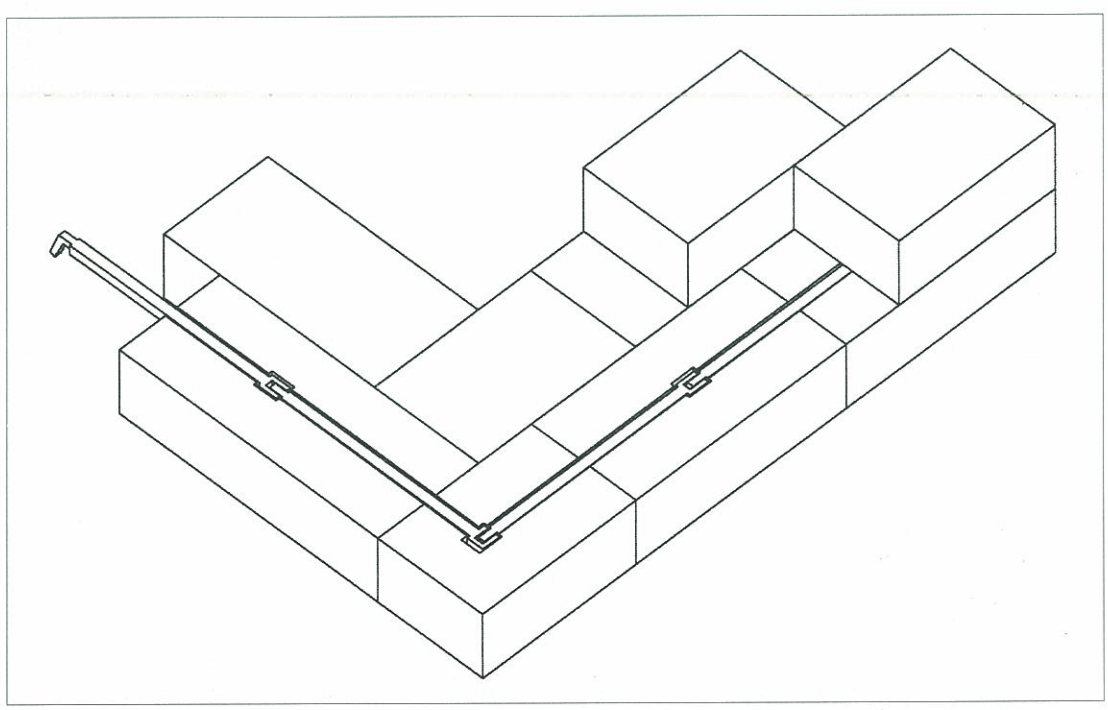

Figure 15 Reconstruction of the fixation elements incorporated in the foundation of the bridge pier.

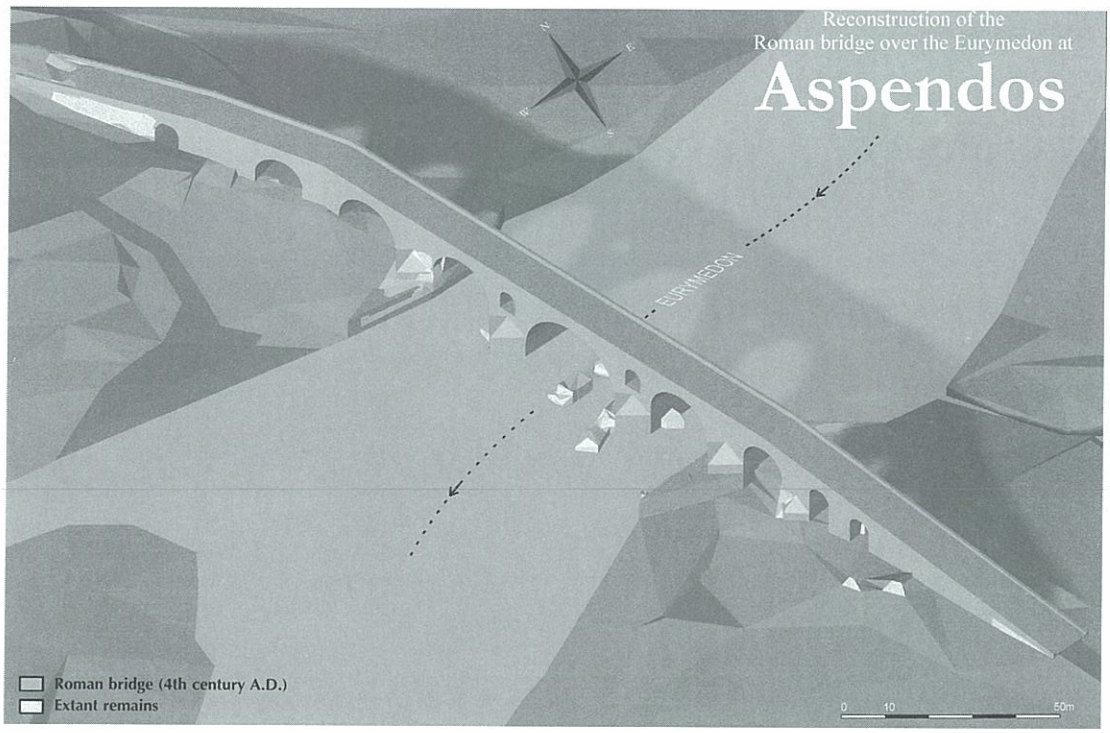

Figure 16 Reconstruction of the Roman bridge (S. Harmeling-M. Stitz).

Figure 17 Remnants of the upstream mole of the Roman bridge, on the left side of river.

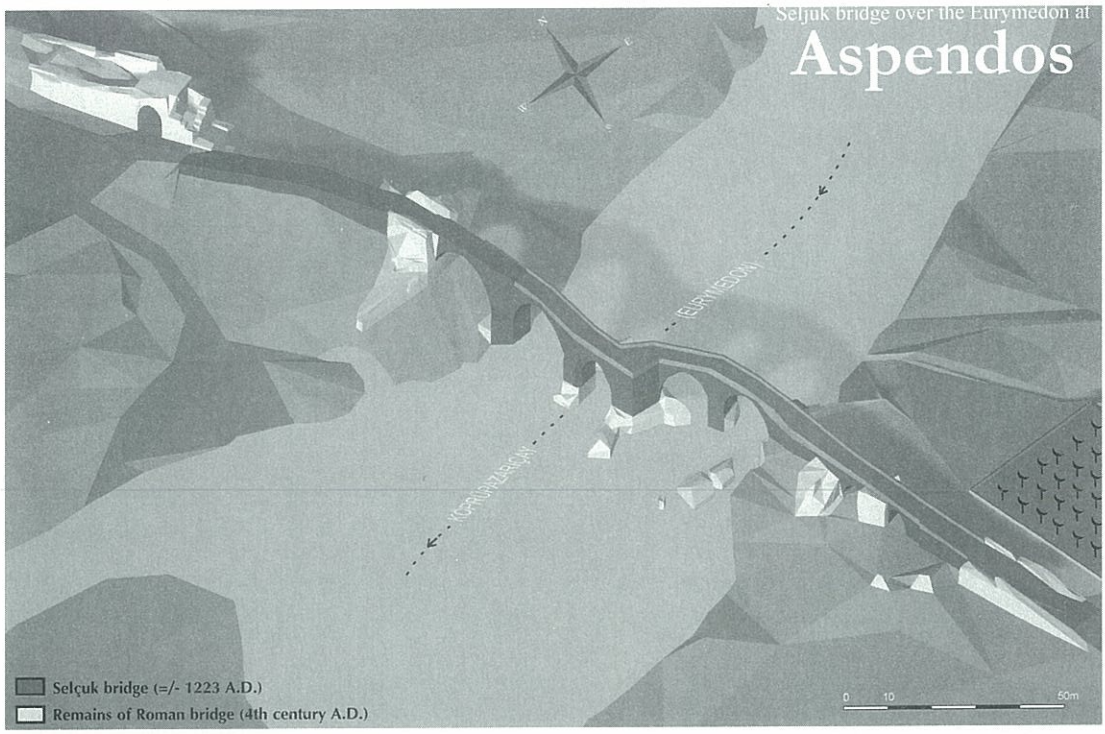

Figure 18
The Seljuk bridge and remains of the Roman bridge, in its present state (S. Harmeling-M. Stitz).

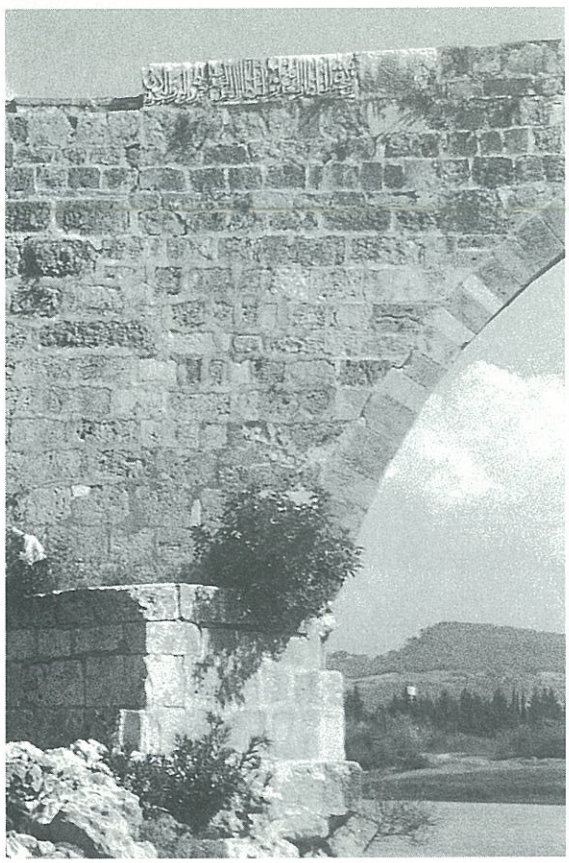

Figure 19
The Parapet with the Seljuk inscription before restoration.

Figure 20
The Marble slab with its Seljuk inscription in the river bed.

Figure 21
Two stone slabs with the inscription to be replaced in the parapet (H. Franssen).

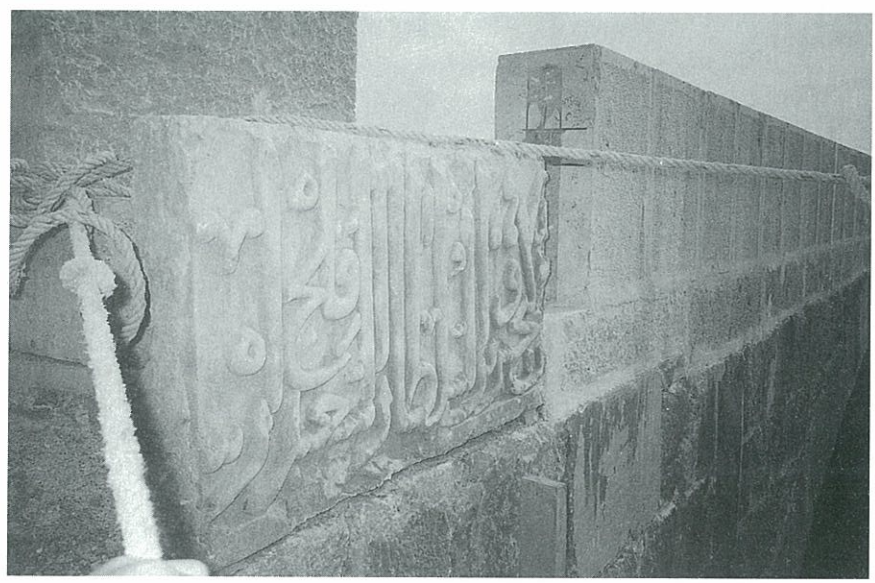

Figure 22
The Construction of new parapet with the Seljuk inscription (H. Franssen).

Figure 23 The Parapet with inscription, in its present state.